2020/3020—3020/3030

PANEL INSTALLATION INSTRUCTIONS

HINGED PAIRS/MULTI-DIRECTIONAL

Operable Wall Systems

Contents

SECTION ONE—*Introduction*
- General Notes....1-2
- Receiving Instructions....1-2
- Material Handling Guidelines....1-3
- Back Charges....1-3
- Spare Parts List....1-4
- Introduction....1-5
- Inspection of the Opening....1-6
- Install Only When Opening is Ready....1-6

SECTION TWO—*Standard Wall Installation Procedure*
- Installing the Panels....1-6
- Adjusting Bottom Seals....1-7
- Operation: Extending the Wall System....1-7
- Operation: Retracting the Wall System....1-8

SECTION THREE—*Optional Installation Features*
- Initial Closure....1-9
- Final Closure....1-10
- Bottom Seals....1-10
- Pass Doors....1-11
- Finish Material Cleaning....1-14

Effective January 1, 2024

SECTION ONE—Introduction

GENERAL NOTES

KWIK-WALL Systems have been engineered and manufactured to provide for maximum ease of installation by authorized, trained and experienced KWIK-WALL distributors. Please read these installations instructions thoroughly prior to beginning.

The service department is available at all times to aid in solving problems. When telephoning the factory for assistance, have the order number (K/N-number) and the job name available to avoid delay in locating the job file. If you have solved a field problem or devised a short cut or procedure which works well for you, let us know so that we can pass the information on to other distributors. Your suggestions will be appreciated.

Warranty:

1. To exercise the warranty it is necessary to contact the factory. A concise written report must be given to the factory customer service manager.

2. No materials are to be returned to the factory until a Return Authorization is issued. The materials must be packed to guard against damage in transit.

3. Returned materials will be factory inspected and you will be advised whether the best course is to repair or replace the parts damaged.

4. Shipments returned “collect” will not be accepted.

RECEIVING INSTRUCTIONS

1. Have a camera available when receiving a Panel shipment. This will help in processing a freight claim should damage be discovered at the time of delivery.

2. Make sure that you are receiving the correct quantity of pieces as shown on the freight Bill of Lading. Remember that KWIK-WALL may have bundled track and trim pieces together as one (1) piece on the freight bill. Take care in assuring that you are receiving the correct and complete materials at the time of delivery.

Damaged Shipments:

All shipments are F.O.B. factory. The factory is not responsible for materials in transit. Our responsibility for shipment ceases with the carrier’s signature of pickup. Should you receive the wall system or parts in apparent damaged condition, a claim for damage must be made within three (3) business days after delivery. If damage is of a concealed nature you must initiate a claim within fifteen (15) calendar days after delivery.

Should visual inspection, upon receipt of shipment, show damage or a shortage in number of packages, it must be noted by you on the freight bill of lading or express receipt and signed by the carrier’s agent or driver under the notation “damage” or “short shipment”. Also, take photographs for additional submittal detail. Failure to do this could result in the carrier refusing to honor the claim. The carrier will furnish you with the necessary claim forms.

KWIK-WALL WILL NOT BE RESPONSIBLE FOR LOSS OR DAMAGE WHEN YOU GIVE THE TRANSPORTATION COMPANY A CLEAN RECEIPT.

When damage or loss is not apparent until the track sections are unpacked, a claim for concealed damage or loss must be entered by making a phone request confirmed by a registered letter to the carrier requesting inspection. Keep all cartons and fillers until inspection has been completed. Again, this claim must be initiated within three (3) business days of delivery and photographs submitted. The carrier will furnish the necessary forms.

WE ARE WILLING TO ASSIST YOU IN EVERY POSSIBLE MANNER IN COLLECTING FOR LOSS OR DAMAGE.

Errors in Shipment:

If there has been a factory error in shipment, it must be reported to KWIK-WALL within three (3) business days from date of shipment noted on the bill of lading. KWIK-WALL's order number (K/N-number) and packing list should be on hand when advising us of the error. This will expedite handling and correction.

Short Shipments:

All claims for short shipments must be reported within three (3) business days from the date of shipment noted on the bill of lading. With the exception of an acknowledged back order, all track sections shipped by KWIK-WALL, received and signed for by the distributor or his designee (G.C., owner, installer, etc.) will be considered as being shipped complete and in its entirety. Short shipments reported by a distributor or his designee will not be replaced on a "no-charge" basis unless the shortage can be verified. To verify a reported short shipment, the material list issued to the shipping department will be compared with a copy of the material list dated and signed by our supervisor of quality assurance. The bill of lading will be used to check the weight against what was shipped and the manufacturing records will also be used to approve or disprove a claim.

MATERIAL HANDLING GUIDELINES

It is necessary to establish a material handling and job site distribution plan prior to delivery. Remember that a panel system can weigh thousands of pounds. If your shipment is free from visible damage to all pieces, proceed with unloading the packages.

BACK CHARGES

Carefully read KWIK-WALL's warranty before making a claim. When you have a legitimate claim, instruct your service men to estimate labor time and charges required to correct the problem before contacting our service department. Always contact our customer service department for approval before doing actual work when you intend to seek back charges. No back charges will be honored without a detailed written request and written approval from KWIK-WALL Company.

SPARE PARTS LIST

KWIK-WALL makes every attempt to provide all necessary fasteners and hardware to complete the track system installation. To minimize the frustration of hardware lost on site or in shipment, KWIK-WALL recommends the following spare parts be carried with the installer to every project site:

- 3/16” Drive pins
- 3/8” Whiz Lock Nuts
- 3/8” x 1” Bolts
- 3/8” Square Nuts
- 3/8” Drop Rods—various lengths
- 3M Super 77 contact adhesive
- Super Glue
- Track Brackets
- 8 x 1/4” steel pop rivets & Gun

TOOLS REQUIRED

Adequate tools and preparation will make the installation of KWIK-WALL track systems much more efficient. This tool list is meant to outline the minimum tool requirements and will also serve as a helpful reminder when preparing for an installation.

- Ladder
- Drill Bits
- Laser level
- Torpedo Level
- 4’ Level
- 9/16” Wrench
- 15/16” Wrench bent
- Hammer
- Screwdrivers
- Cordless Drill & Impact
- Miter Saw with Aluminum Blade
- Socket Set
- 1” PVC Pipe—2’ length
- Johnson Bar
- Dielectric Grease (automotive bulb grease)

INTRODUCTION

KWIK-WALL Hinged Pair Wall Systems consist of two (2) hinged together supported by a track system. Each panel has one (1) carrier located in the center at the top of the panel.

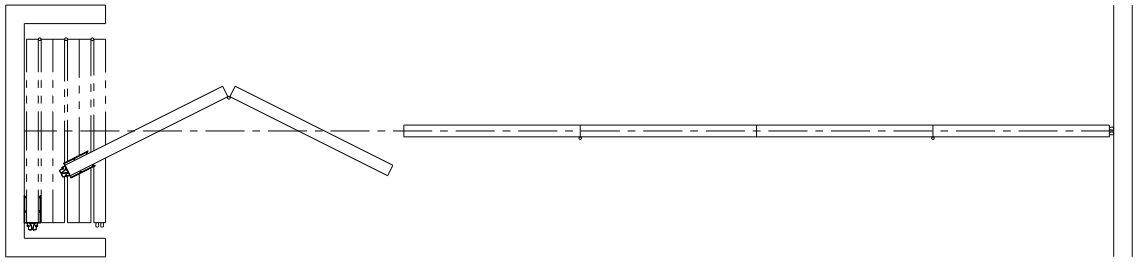

KWIK-WALL Multi-Directional Wall Systems consist of individual panels supported by an overhead track system. Each panel has two (2) carriers located in the top of the panel.

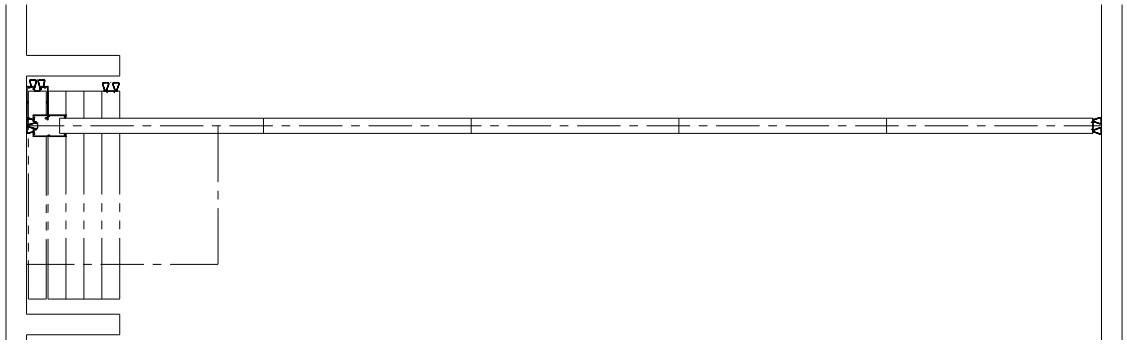

All KWIK-WALL panels have an “Identification Label” applied to the edge of the panel. This label contains the projects K/N-number, the letter designating the wall, and the panel number indicating the installation sequence in the wall. This corresponds to the information on the shop drawing.

INSPECTION of the OPENING

Do not proceed with the installation of the operable wall track system until the finished opening has been measured and inspected for accuracy, plumbness, levelness and completeness according to ASTM E557. Note any discrepancies and present them to the attention of the General Contractor, Architect, or Owner's Representative.

Check the opening against the approved shop drawings to verify fabrication height and width. Also, verify that the Header is installed in a continuous and level fashion, complete and secure to the building structure and located per the contract documents.

SECTION One—Standard Wall Installation Procedure

INSTALLING THE PANELS

1. Install the bulb seals on the initial and final panels.

2.. Remove the Escapement section of the track (noted on the shop drawing) using a 9/16" socket through the throat of the track. Also, remember to drive alignment pins out of the joints in the track.

3. Before proceeding, inspect the condition of the track to be certain that the bottom inside flanges of the track are clean and that all edges are free of burrs.

4. Double check the carrier location. The distance between carriers should match or be greater than the spacing of the legs of the track in the stack area.

5. Follow the Shop Drawing to install panels in proper sequence. Note the location of the escapement section and sequence accordingly.

   a. **For Multi-directional systems:** The track should be lubricated with Sil-Glyde immediately before the panels are hung. Use your finger to apply to the inside flanges and tread surfaces of the track. Wipe off any excess from the bottom of the track. Install each panel by laying a 1" diameter PVC pipe on the floor in-line with the opening in the track escapement section. Center bottom of panel on PVC pipe and stand panel upright. Align the carriers, then roll the panel into the track.

   b. **For Hinged Pair systems:** Clean out the inside of the track. Saturate a rag with solvent (Naphtha or Toluene, etc.) and clean the entire track system out. Center panel perpendicular to the track under the escapement section, use a Johnson Bar lift the panel into the track

6. The carrier height dimension is nominally pre-set at the factory. Once the panels are installed, the carriers should be level.

   a. If the panels are not level, bend sweep seal flaps down to expose pendant. The pendant is equipped with jamb nut and adjustment nut. You will need a 15/16" open end wrench bent at the end to accomplish this task.

   b. Loosen jamb nut and adjust carrier height up or down by turning the 15/16"" adjustment nut. Retighten jamb nut securely.

ADJUSTING BOTTOM SEALS

The bottom seal is a part of the panel itself so there is not any additional installation procedures that need to take place in order for this mechanism to function properly. However, the Final Closure panel may contain an Adjustable Bottom Seal. These panels must be in the extended position to adjust.

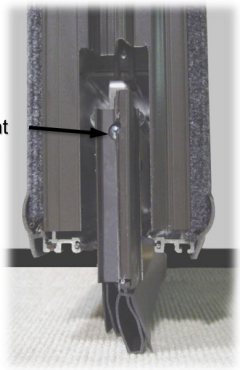

a. Separate the Bulb Seal Fingers to expose the adjustment screw. Loosen the adjustment screw and slide the seal assembly down until it contacts the floor. The height adjustment of the seal is critical in order to prevent the seal from dragging and binding the panel.

b. After the seal is adjusted, retighten the adjustment screws.

OPERATION: Extending the Wall System

1. Grasp the edges of the first panel group on both sides while standing directly under the track centerline. The first panel exiting the stack will have Bulb Seals mounted on the lead edge.

   a. For Hinged Pairs: Walking backwards away from the stack end, pull the panels slowly and evenly from both sides until the panels can be unfolded. Remember to keep fingers out of the hinged joints when straightening each panel group to avoid pinching.

   b. For Multi-Directional: Walking backwards away from the stack end, pull the panels slowly and evenly from both sides. Then move to the opposite edge of the panel.

3. Stand behind the flattened panel group and carefully push the panel group away from the stack end until the lead panel has made sufficient contact with the permanent wall. Once in place set the bottom seal to stabilize the panel (see instructions below).

4. Each panel or panel pair, except the last, is equipped with an edge-activated bottom seal that is operated using a removable wrench supplied by the manufacturer. Insert the removable wrench. (see left) into the opening located in the edge of the panel. Rotate the wrench to EXTEND the Bottom seal. Continue rotating wrench until mechanism contacts a “stop”.



5. Repeat the same routine until all the panel pairs have been set up.

Note: *DO NOT ATTEMPT TO MOVE THE PANELS WITH THE OPERABLE BOTTOM SEALS TOUCHING \THE FLOOR.*

FINAL CLOSURE – EXPANDER PANEL



1. The final closure panel is the last panel to exit the stack area. This panel utilizes an expander mechanism that mechanically telescopes outward to create a positive contact seal with a rigid wall or jamb.

2. To extend the expander, insert the removable wrench (as shown) into an escutcheon plate located on the face of the panel and rotate to set the Expander panel in place.

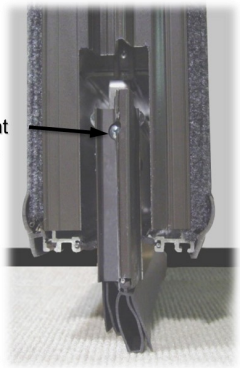

3. The bottom seals on the Final Closure panel(s) may contain Adjustable Bottom Seals. These seals contain screws in each edge of the panel. Loosen the screws to adjust the seals so that they are in sufficient contact with the floor surface. Then tighten the screws.

Note: *Always adjust seal as close to the extended panel position as possible.*

OPERATION: Retracting the Wall System

1. To retract the wall system, insert the removable wrench into an escutcheon plate located on the face of the trail panel and rotate to release the Expander mechanism.



a. For Hinged Pairs: Disengage the Operable Bottom Seal from the next pair of panels by inserting the removable wrench into the opening located in the edge of the panel. Rotate the wrench to RETRACT the Bottom seal. Continue rotating wrench until mechanism is fully retracted into the panel.

b. For Multi-Directional: Disengage the Operable Bottom Seal from each of panel by inserting the removable wrench into the opening located in the edge of the panel. Rotate the wrench to RETRACT the Bottom seal. Continue rotating wrench until mechanism is fully retracted into the panel.



2. Gently pull the panels until they separate from the adjacent panel. Grasp the edge of the panel(s) on both faces and walk toward the stack end. When they reach the storage location, either fold the two panels together and push them flat against the wall, or for multi-directional panels guide then onto the stack legs.

3. Repeat the same routine until all the panel (pairs) have been removed from the set up location.

SECTION THREE—Optional Installation Features

Initial Closure Options

ADJUSTABLE STARTER JAMB

The Adjustable Starter Jamb consists of two (2) aluminum extrusions which are permanently mounted to a structural wall surface and are field-adjustable to compensate for out-of-plumb conditions of the fixed wall. The lead panel edge is equipped with a tongue-and-groove type vertical rail that will interlock with the jamb.

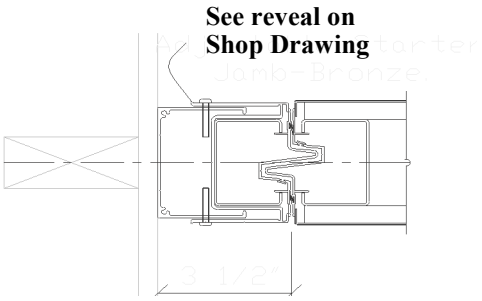

1. Install the jamb to a structural wall member, the centerline of the jamb must align with the centerline of the track.

2. The top of the jamb will butt up against the bottom flange of the track. If the jamb is too tall for the opening, cut the jamb off at the BOTTOM. The jamb should be plumb along the front and side faces.

FIXED STARTER JAMB

The Fixed Starter Jamb consists of an aluminum extrusion which is permanently mounted to a structural wall surface. The lead panel edge is equipped with a tongue-and-groove type vertical rail that will interlock with the jamb.

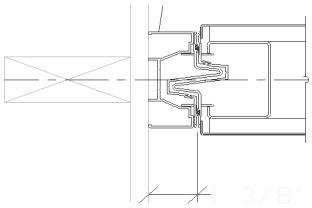

1. Install the jamb to a structural wall member The centerline of the jamb must align with the centerline of the track.

2. The top of the jamb will butt up against the bottom flange of the track. If the jamb is too tall for the opening, cut the jamb off at the BOTTOM. The jamb should be plumb along the front and side faces.

Final Closure Options

COMMUNICATING PANEL CLOSURE—For Hinged Pair Systems

The Communicating Panel closure consists of a full-sized panel hinged permanently and directly to a structural wall. The Communicating Panel functions as a full height Pass Door and includes an adjustable bottom seal and flush pull handles.

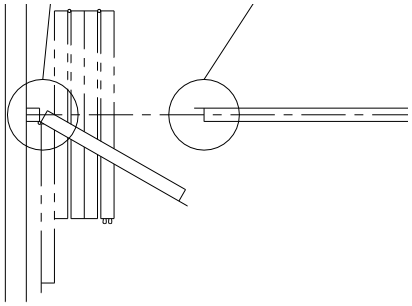

1. The Communicating Panel requires a jamb to be permanently mounted to a structural wall. The centerline of the jamb must align with the centerline of the track.

2. The top of the jamb will butt up against the bottom flange of the track. If the jamb is too tall for the opening, cut the jamb off at the BOTTOM. The jamb should be plumb along the front and side faces.

3. Fasten “C” channel section of the jamb to wall, slide the hinged section over the “C” channel and plumb; see reveal on shop drawings. Using self tapping screws provided, screw the two sections of the jamb together.

4. Check the Adjustable Bottom sweep seals to insure that they are sufficiently contacting the floor surface. (See “Adjustable Bottom Seals” for instructions on adjusting.)

HINGED PANEL CLOSURE

The Hinged Panel closure consists of a panel hinged permanently and directly to a structural wall. This panel includes an adjustable bottom seal and flush pull handles.

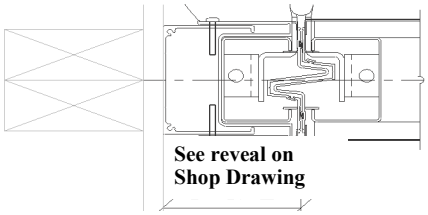

1. The Hinged Panel requires a jamb to be permanently mounted to a structural wall. Install the jamb the centerline of the jamb must align with the centerline of the track.

2. The top of the jamb will butt up against the bottom flange of the track. If the jamb is too tall for the opening, cut the jamb off at the BOTTOM. The jamb should be plumb along the front and side faces.

3. Fasten “C” channel section of the jamb to wall, slide the hinged section over the “C” channel and plumb; see reveal on shop drawings. Using self tapping screws provided, screw the two sections of the jamb together.

4. Check the Adjustable Bottom sweep seals to insure that they are sufficiently contacting the floor surface. (See “Adjustable Bottom Seals” for instructions on adjusting.)

LAP CLOSURE

The Lap Closure is accomplished by two (2) panels. One panel is equipped with bulb seals to compress against a rigid and structural wall. The other panel is made with lap-type aluminum extrusions that overlap with the adjacent panel, also equipped with a lap extrusion, on the opposite side. These last panels are fitted with adjustable bottom seals. These panels are installed in the same manner as other Hinged Pair panels.

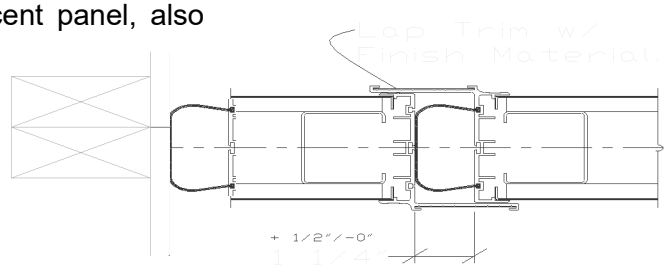

Bottom Seal Options

AUTOMATIC BOTTOM SEALS

The bottom seals will automatically drop into position without the use of a removable wrench. Each panel with an Automatic Bottom Seal will already have the bottom seal in the retracted position. When extending each panel in the wall system, carefully align the adjacent panel or permanent wall first and as you continue to push, the nose of the Automatic Bottom Seal will force that seal back and down and thus setting the seal. The Automatic Bottom Seal should now be in full contact with the permanent floor to stabilize the panel. Repeat the same routine until all of the panels have been set up.

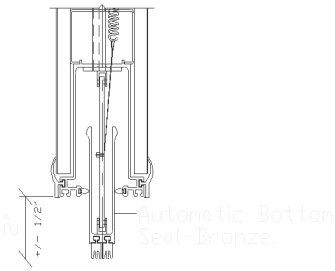

If the wall system stacks at one end, a “Wall Protector Plate” will need to be installed on the permanent wall opposite the stack area. It is to be mounted even with the finished floor line and at the centerline of the panel.

If the wall system stacks at both ends, an “Activator / Floor Plate” will be installed in the middle of the opening where the two sections will meet.

Note: *Automatic Bottom Seals can operate in only one direction. Please make sure that the panels are installed properly.*

ADJUSTABLE BOTTOM SEALS

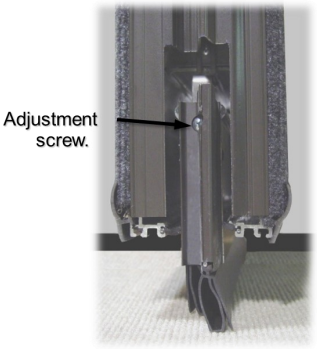

Adjustable Bottom Seals consist of field adjustable, continuous-contact vinyl sweep seals that allow for 3/4” of nominal adjustment.

On the edge of each panel is a screw. To lower or raise the Adjustable Bottom Seal, simply loosen the screw on both edges and “adjust” the bottom seal up or down until it sufficiently contacts the floor surface. Once adjusted, tighten the screws.

Note: *Always adjust seal as close to the extended panel position as possible.*

Other Panel Options

OPERABLE TOP SEALS

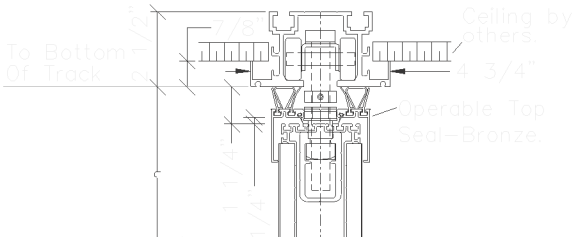

The Operable Top Seal consists of an edge-activated seal using a removable wrench as supplied by the manufacturer. The top seals are operated simultaneously and in conjunction with Operable Bottom Seals. (Note: See Operable Bottom Seals for additional information.)

The Top seal is a part of the panel itself so there is not any additional installation procedures that need to take place in order for this mechanism to function properly.

SINGLE or DOUBLE PASS DOOR PANEL

Pass Door panels are moved and operated in a similar manner as the Intermediate Panels. A single or double pass door panel contains two (2) operating seal mechanisms, one in each leg of the pass door panel. Pass Door should be closed anytime panel is moved. The Pass Door is a part of the panel itself so there is not any additional installation procedures that need to take place in order for this mechanism to function properly. All model 2030 single and double pass door panels contain Adjustable Bottom Seals. In order to stabilize the pass door panel, KWIK-WALL has included one surface foot bolt on each pass door leg that should interface with a strike plate mounted in the floor.





POCKET DOOR OPERATION

Pocket Doors are constructed of the same material as the operable wall panels, unless otherwise noted on the shop drawings. Pocket Doors are provided to close off the pocket area when the wall system is in the stacked or extended position. Pocket Door(s) should be handled with the same type of care as the panels. The Top and Bottom of the pocket doors contain sweep seals which aid in completing the closure of the doors.

Double Pocket Door with Expander

For wall systems that specify the last panel to extend through the pocket doors, the Pocket Doors will close and seal on each side of that last panel. Each Pocket Door panel is hinged to a wall jamb.

1. Install the jamb in the same manner as the Communicating Panel.

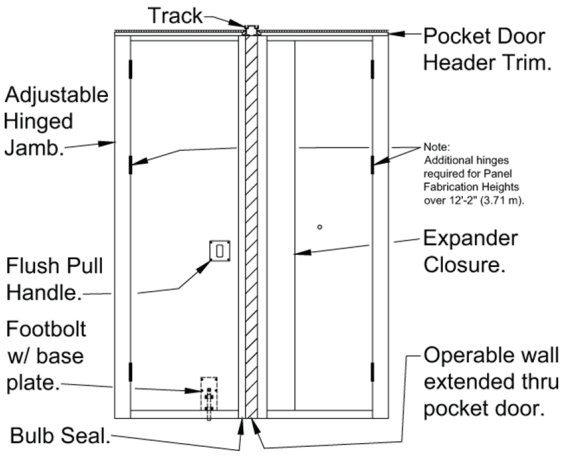

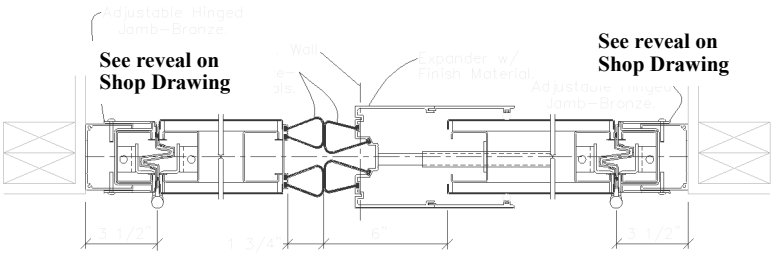

Panels not in use. ↑

Panels in use. ↗

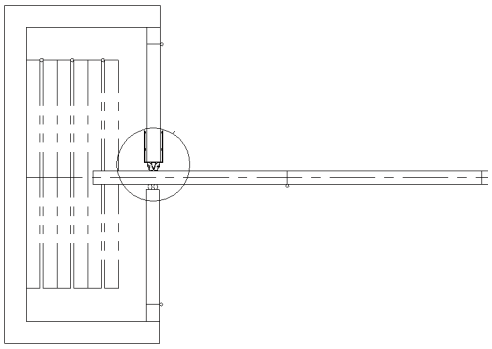

Double Pocket Door with Lap

For wall systems that specify the last panel to extend to the face of the pocket doors, there will be a pocket door panel mounted to each side of the pocket wall. On the edge of one panel is a bulb seal and on the other is a lap extrusion.

1. Install the jamb in the same manner as the Communicating Panel.

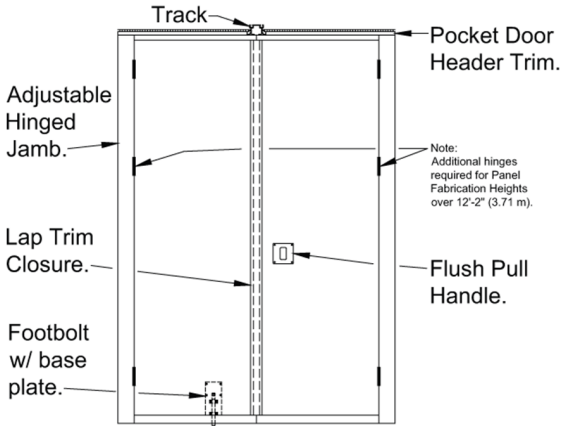

Single Pocket Door with Bulb

1. Install the jamb to a structural wall member with end labeled TOP up on both sides of the pocket walls.

2. The top of the jamb will butt up against the ceiling. If the jamb is too tall for the opening, cut the jamb off at the BOTTOM. The jamb should be plumb along the front and side faces.

3. Fasten “C” channel section of the jamb to wall, slide the hinged section over the “C” channel and plumb; see reveal on shop drawings. Using self tapping screws provided, screw the two sections of the jamb together.

4. Check the Adjustable Bottom sweep seals to insure that they are sufficiently contacting the floor surface. (See “Adjustable Bottom Seals” `for instructions on adjusting.)

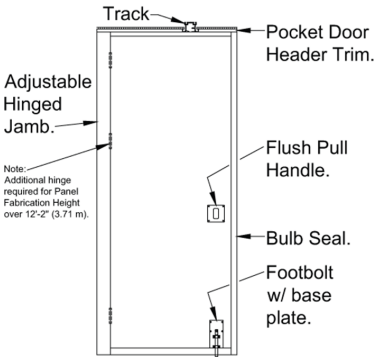

FINISH MATERIAL CLEANING: STANDARD VINYL and UPGRADE VINYL

KWIK-WALL's Vinyl finish materials meet and exceed G.S.A. Federal Specification CCC-W-408A and conform to the CFFA Quality Standard for Vinyl Coated Fabric Wall covering. Standard selections of vinyl have also been tested for fire hazard classification and have achieved a Class A rating in accordance to ASTM E84. In addition, these vinyl wall coverings are mildew-resistant and contain bactericidal additives to inhibit microbiological growth of Staphylococcus aureus, Escherichia coli, and Aspergillus niger.

Cleaning soiled areas is best accomplished as soon as possible after soiling occurs. A mild solution of warm water and a standard household non-caustic cleaner solution applied with a medium bristly brush will clean most stains. The area can be wiped dry with a clean soft cloth. *Do not* use solvent-based cleaning solutions as they may affect the color pigment of the vinyl fabric.

FINISH MATERIAL CLEANING: UPGRADE CARPET and UPGRADE FABRIC

KWIK-WALL's Upgrade Carpet and Upgrade Fabric materials consist of polyolefin yarn and fiber that is solution-dyed to assure consistent color and colorfastness. These fabric materials are anti-microbial and do not support the growth of mildew or bacteria. The polyolefin staple fibers are stain resistant and are unaffected by most chemicals, acids, alkalis, salts, and cleaning agents (including household bleach). Upgrade Carpet and Upgrade Fabric materials are Class A rated as tested in accordance with ASTM E84 Tunnel Test.

Cleaning soiled areas from these fabric surfaces is best accomplished as soon as possible after soiling occurs. A mild solution of warm water and a standard household non-caustic cleaner solution dabbed with a clean white cloth. The area may then be blotted with a clean, dry, soft cloth to absorb excess water. If you have to scrub the surface, gently work the cloth back and forth with the least amount of pressure necessary. *Do not* use a bristle brush, as it may damage the fabric nap. After cleaning, allow the material to air dry.



Operable, Moveable Glass and Accordion Wall Systems

4650 Industrial Ave.
Springfield, IL 62703
Phone: 217-522-5553
Website: www.kwik-wall.com
Fax: 217-522-1170
E-Mail: kwinfo@kwik-wall.com

Distributed By: