Track Installation Instructions

For OPERABLE WALL SYSTEMS

Contents

General Notes 1-2
Receiving Instructions 1-2
Material Handling Guidelines 1-3
Back Charges 1-3
Spare Parts List 1-4
Tools Required 1-4
Inspection of the Opening 1-6
Install Only When Opening is Ready 1-6
Installing the Track 1-7
    Hanging Drop Rods 1-7
    Hanging Direct Mount 1-8
Multi-Directional Intersections & Stack Assemblies 1-9
Cleaning the Track 1-10
Track Lubrication 1-10

Effective January 1, 2024

GENERAL NOTES

KWIK-WALL Systems have been engineered and manufactured to provide for maximum ease of installation by authorized, trained and experienced KWIK-WALL distributors. Please read these installations instructions thoroughly prior to beginning.

The service department is available at all times to aid in solving problems. When telephoning the factory for assistance, have the order number (K/N-number) and the job name available to avoid delay in locating the job file. If you have solved a field problem or devised a short cut or procedure which works well for you, let us know so that we can pass the information on to other distributors. Your suggestions will be appreciated.

Warranty:

1. To exercise the warranty it is necessary to contact the factory. A concise written report must be given to the factory customer service manager.

2. No materials are to be returned to the factory until a Return Authorization is issued. The materials must be packed to guard against damage in transit.

3. Returned materials will be factory inspected and you will be advised whether the best course is to repair or replace the parts damaged.

4. Shipments returned “collect” will not be accepted.

RECEIVING INSTRUCTIONS

1. Have a camera available when receiving a Track System shipment. This will help in processing a freight claim should damage be discovered at the time of delivery.

2. Make sure that you are receiving the correct quantity of pieces as shown on the freight Bill of Lading. Remember that KWIK-WALL may have bundled track and trim pieces together as one (1) piece on the freight bill. Take care in assuring that you are receiving the correct and complete materials at the time of delivery.

Damaged Shipments:

All shipments are F.O.B. factory. The factory is not responsible for materials in transit. Our responsibility for shipment ceases with the carrier’s signature of pickup. Should you receive the wall system or parts in apparent damaged condition, a claim for damage must be made within three (3) business days after delivery. If damage is of a concealed nature you must initiate a claim within fifteen (15) calendar days after delivery.

Should visual inspection, upon receipt of shipment, show damage or a shortage in number of packages, it must be noted by you on the freight bill of lading or express receipt and signed by the carrier’s agent or driver under the notation “damage” or “short shipment”. Also, take photographs for additional submittal detail. Failure to do this could result in the carrier refusing to honor the claim. The carrier will furnish you with the necessary claim forms.

KWIK-WALL WILL NOT BE RESPONSIBLE FOR LOSS OR DAMAGE WHEN YOU GIVE THE TRANSPORTATION COMPANY A CLEAN RECEIPT.

When damage or loss is not apparent until the track sections are unpacked, a claim for concealed damage or loss must be entered by making a phone request confirmed by a registered letter to the carrier requesting inspection. Keep all cartons and fillers until inspection has been completed. Again, this claim must be initiated within three (3) business days of delivery and photographs submitted. The carrier will furnish the necessary forms.

WE ARE WILLING TO ASSIST YOU IN EVERY POSSIBLE MANNER IN COLLECTING FOR LOSS OR DAMAGE.

Errors in Shipment:

If there has been a factory error in shipment, it must be reported to KWIK-WALL within three (3) business days from date of shipment noted on the bill of lading. KWIK-WALL's order number (K/N-number) and packing list should be on hand when advising us of the error. This will expedite handling and correction.

Short Shipments:

All claims for short shipments must be reported within three (3) business days from the date of shipment noted on the bill of lading. With the exception of an acknowledged back order, all track sections shipped by KWIK-WALL, received and signed for by the distributor or his designee (G.C., owner, installer, etc.) will be considered as being shipped complete and in its entirety. Short shipments reported by a distributor or his designee will not be replaced on a "no-charge" basis unless the shortage can be verified. To verify a reported short shipment, the material list issued to the shipping department will be compared with a copy of the material list dated and signed by our supervisor of quality assurance. The bill of lading will be used to check the weight against what was shipped and the manufacturing records will also be used to approve or disprove a claim.

MATERIAL HANDLING GUIDELINES

It is necessary to establish a material handling and job site distribution plan prior to delivery. Remember that a track system can weigh a few hundred pounds. If your shipment is free from visible damage to all pieces, proceed with unloading the packages.

BACK CHARGES

Carefully read KWIK-WALL's warranty before making a claim. When you have a legitimate claim, instruct your service men to estimate labor time and charges required to correct the problem before contacting our service department. Always contact our customer service department for approval before doing actual work when you intend to seek back charges. No back charges will be honored without a detailed written request and written approval from KWIK-WALL Company.

SPARE PARTS LIST

KWIK-WALL makes every attempt to provide all necessary fasteners and hardware to complete the track system installation. To minimize the frustration of hardware lost on site or in shipment, KWIK-WALL recommends the following spare parts be carried with the installer to every project site:

- 3/16” Drive pins
- 3/8” Whiz Lock Nuts
- 3/8” x 1” Bolts
- 3/8” Square Nuts
- 3/8” Drop Rods—various lengths
- 3M Super 77 contact adhesive
- Super Glue
- Track Brackets
- 8 x 1/4” steel pop rivets & Gun

TOOLS REQUIRED

Adequate tools and preparation will make the installation of KWIK-WALL track systems much more efficient. This tool list is meant to outline the minimum tool requirements and will also serve as a helpful reminder when preparing for an installation.

- Ladder
- Drill Bits
- Laser level
- Torpedo Level
- 4’ Level
- 9/16” Wrench
- 15/16” Wrench bent
- Hammer
- Screwdrivers
- Cordless Drill & Impact
- Miter Saw with Aluminum Blade
- Socket Set
- 1” PVC Pipe—2’ length
- Johnson Bar
- Dielectric Grease (automotive bulb grease)

INTRODUCTION

KWIK-WALL Type 425 and 850 Track consists of straight sections of aluminum extrusion. This system is designed to offer flexibility in wall locations, yet can be simply and easily installed by following these instructions.

INSPECTION of the OPENING

Do not proceed with the installation of the track system until the finished opening has been measured and inspected for accuracy, plumbness, levelness and completeness according to ASTM E557. Note any discrepancies and present them to the attention of the General Contractor, Architect, or Owner's Representative. It is not recommended to begin the physical installation until all opening deficiencies have been resolved.

Check the opening against the approved shop drawings to verify fabrication height and width. Also, verify that the Header is installed in a continuous and level fashion, complete and secure to the building structure and located per the contract documents.

KWIK-WALL track systems are manufactured to fit the opening dimensions furnished to us by you. When a track system will not fit into an opening check one of the following reasons:

1. Field measurement was disregarded and dimensions were taken from architectural drawings.

2. Field measurements inaccurately taken and submitted.

Take measurements at four foot intervals across the opening to reveal any variations in floor level. THE HEADER AND CEILING MUST BE LEVEL per ASTM E557.

INSTALL ONLY WHEN OPENING IS READY

1. Be sure the opening is constructed to exact dimensions as shown on KWIK-WALL drawings. The drawings should be approved by the contractor, owner, or architect before the track system is released for manufacturing. When we receive the approved drawings, the track is then manufactured to the dimensions shown on these drawings.

2. The header must be straight and level according to ASTM E557 deflection variables. The structural support must be adequate enough to support the weight of the wall system in accordance with ASTM E557 guidelines.

3. Floor must be level and smooth according to ASTM E557.

4. The opening dimensions must match those used to order the track. Verify with shop drawings.

5. The beam must be drilled to the Kwik-Wall template provided on the shop drawings.

INSTALLING THE TRACK

KWIK-WALL packages all Track sections complete with alignment pins and all necessary attachment hardware. The Track for each project consists of straight sections of an aluminum extrusion or steel roll-formed shapes. Track is typically shipped ready for Drop Rod Mounting to the overhead Structural Support, but can be punched for Direct Mount to Wood Header upon request.

Each Track shipment typically includes 8'-0", 12'-0" and 3'-10" escapement sections. Quantities are determined by overall width. The last track section opposite the stack end is sent approximately 6" longer than the opening width indicated on the shop drawing to accommodate any minor variations. This section will need to be field cut to fit.

General Mounting Instructions

1. The sequence to follow for installing the track is noted on the shop drawing and will tell you the order to install the pieces and which section is to be field cut.

2. Track MUST be LEVEL in all installations.

3. Each section of track should be inspected to make certain there are no burrs or rough edges at the ends. If necessary, file along the bottom and sides of the track. When butting up two (2) sections of track together, it is important that the joint between the sections be as tight as possible to insure the trolley a smooth operation across each joint.

4. Align each track sections by tapping alignment pins across the track joint and halfway into the adjacent track sections. (Flat or straight bladed screw driver is handy.)

5. Cut the last track section to fit opening. File edges as noted in step 3.

6. Thoroughly clean the ends of the track where the cuts were made.

7. When the track system is completely installed it should fill the opening. There should not be any gaps in the intermediate joints or at the ends of the track. The "E" or escapement section should have 1/16" - 1/8" gap at each end to allow for easy removal to install the panels.

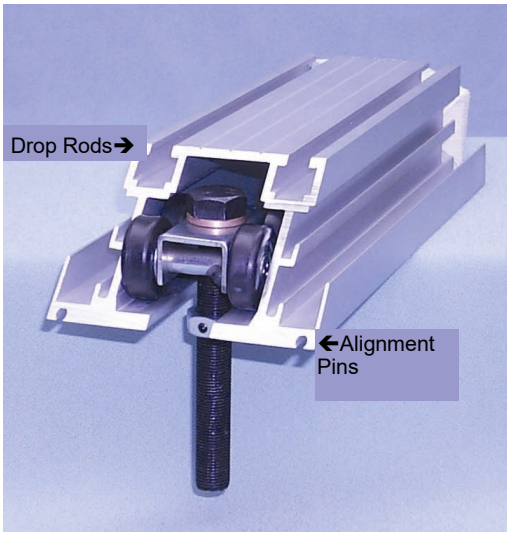

Hanging the Track—Drop Rods

425 Hinged Pair
Aluminum Track

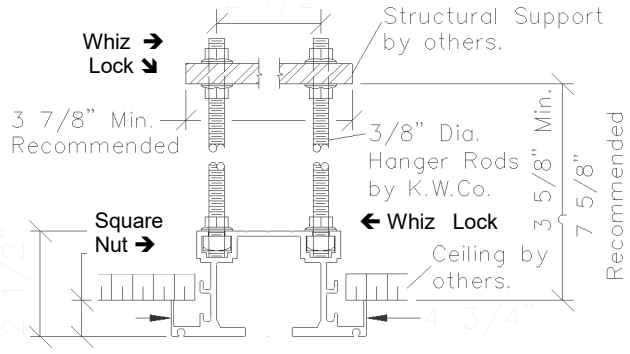

1. Remember to use the shop drawings for the correct installation sequence. A drop rod kit consists of Mounting Brackets, Drop Rods and Hardware. A special mounting bracket (4" wide with four holes) is included for most of the joints between straight track sections.

   a. Install the square nut in top nut slot of the track.

   b. Thread the drop rod into the square nut and lock with 3/8" Whiz lock nut. Each drop rod should have three (3) Whiz lock nuts, one (1 each) on top and bottom of overhead steel and one (1) on top of track.

   c. Install a 4" wide splice bracket at most straight track joints. Make certain bracket covers the joint by installing drop rods in correct hole.

   d. Install 3/8" x 1" cap screws in other set of holes.

   e. Track should be adjusted so that it is installed absolutely level.

2. "Removable Track Section" The plate has been pre-drilled at the factory. By removing the 3/8" x 1 1/2"" cap screws and alignment pins, this section of track can be removed for installation and removal of panels. Mounting Plates extend beyond track to allow adjoining track sections to be mounted to the plate using four 3/8" x 1" cap screws.

Hanging Track – Direct Mount

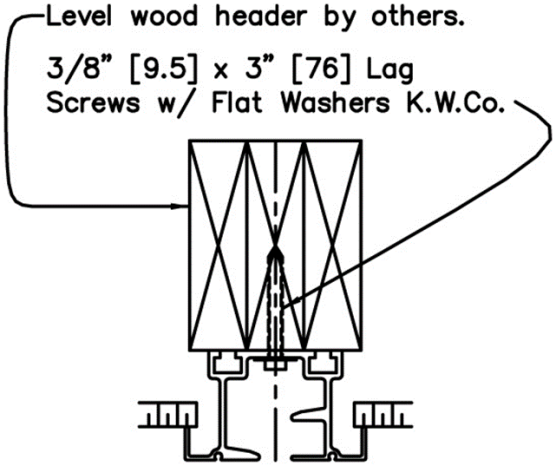

Refer to the shop drawing and locate the centerline of the partition run. Mark the centerline of track. When mounting track directly to a wood header, KWIK-WALL Co. will furnish 3/8" x 3" Lag Screws. All of the Lag Screws for this type of installation will be located along the centerline of the track.

1. Remember to reference shop drawings for correct installation sequence. Hold the track section up to the wood header with the centerline of the track and line up. (Note: Header must be straight.)

2. Predrill the first and last holes for each section of the track using the track which is factory drilled as a template.

3. Now install a 3/8" x 3" Lag Screw and the flat washer at each location. The remaining holes in the wood header can now be drilled. (Use a bit extension, if necessary.)

4. The Removable Track Section is held in place with three (3) 3/8" x 3" Lag Screws.

5. With the Stack Assembly correctly located and leveled, you should now install the straight sections of track that make up the stack area. These pieces of track are normally marked as “A” sections. The center to center dimensions of these tracks is VERY CRITICAL in order to get the panel in and out of the stack area. In order to maintain the correct dimension from one end of the stack area to the other, KWIK-WALL Co. has provided an track gauge that should be located between the track sections. This bar should be located toward the “back” of the stack area and will remain in place as a permanent part of the track system.

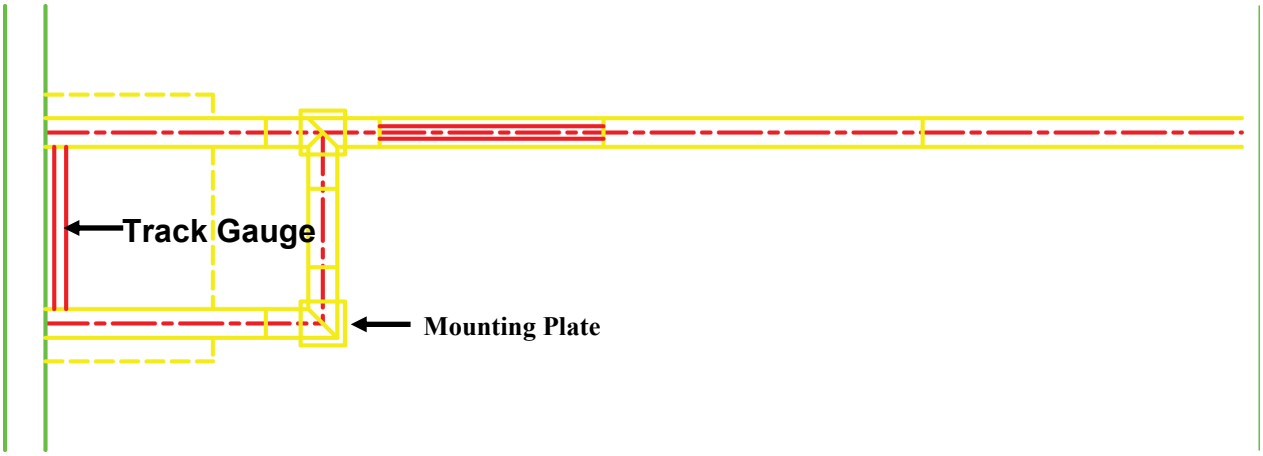

Note: *All stack sections and straight pieces must be installed with the orientation of the Upper and Lower legs as noted on installation drawings. Failure to do this will cause incorrect operation and will void the warranty.*

←Upper

Lower→

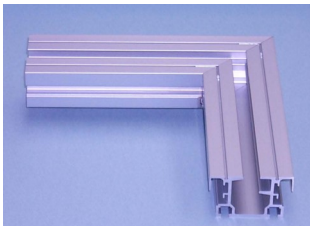

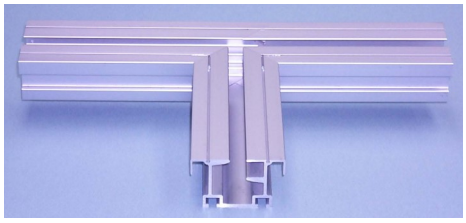

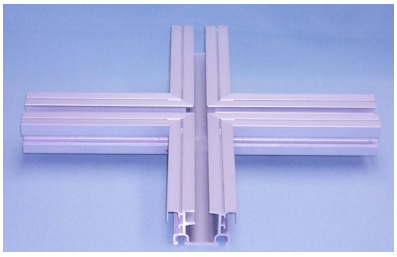

Take Field Dimensions:

1. For height, take measurements every 4' from finished floor to bottom of track.
2. For length, take measurements at top, bottom and middle.
3. Verify all Hold Dimensions. Centerline of track to pocket walls.

Cleaning Track

After the track system is completely installed, it is necessary to clean out the inside of the track. Saturate a rag with solvent (Naphtha or Toluene, etc.) and clean the entire track system out. You should then follow up with a dry rag to remove any excess solvent.

NOTE: DO NOT LUBRICATE THE TRACK AT THIS TIME.

When the track system is completely installed it should fill the opening. There should not be any gaps in the intermediate joints or at the ends of the track.

TRACK LUBRICATION

The track should be lubricated with Sil-Glyde immediately before the panels are hung. Use your finger to apply to the inside flanges and tread surfaces of the track. Wipe off any excess from the bottom of the track. Roll the panels back and forth to distribute the lubricant across the entire track and over the trolley wheels. Wipe off any excess from the bottom and gap of the track. All intersections must have lubrication on both the upper and lower fingers.

Minor friction is created by the top sweep seal that is in continuous and constant contact with the Track. A thin coating of silicone spray to surface of the Track will improve movement.

Field Note: Installers!!! Do not neglect this important lubrication step. Lubricating the track and applying the silicone spray takes only a few minutes. It's the difference between a good installation and a great one ... and will make operating the panels on a daily basis much easier.

Note: If any significant construction work has been done since the track installation, re-clean the track prior to panel installation.

Operable, Moveable Glass and Accordion Wall Systems

4650 Industrial Ave.
Springfield, IL 62703
Phone: 217-522-5553
Website: www.kwik-wall.com
Fax: 217-522-1170
E-Mail: kwinfo@kwik-wall.com

Distributed By: