Luminous™ – *Movable Glass Walls by Kwik-Wall*
Technical Data

STELLA · **NOVA** · LUNA · ILLONA · AVA · MATA

NOVA™ – Individual, Pivoting Panels
SECTION 10 22 39 – FOLDING PANEL PARTITIONS – GLASS

Overview

Panel Type
- [x] Individual
- [ ] Hinged-Paired
- [ ] Continuously-Hinged

Partition Support
- [x] Top Support
- [ ] Floor Support

Stacking Configurations
- [x] Centerline
- [ ] Offset
- [ ] Remote
- [x] Bi-Parting

Frame Thickness
[ ] 4-11/16"	[119]	50 STC
[x] 4-9/16"	[116]	44 STC
[ ] 2-13/16"	[71]	
[ ] 1-3/4"	[44]	
[ ] 1-3/8"	[35]	
[ ] Frameless		

Operation – Panels
- [ ] Fully-Automatic
- [x] Manual

Operation – Seals
- [ ] Automatic
- [x] Manual
- [ ] Fixed

Sound Control
- [ ] 50 STC
- [x] 44 STC
- [ ] 43 STC
- [ ] 35 STC
- [ ] 33 STC
- [ ] Non-Acoustic

Power Requirement
- [ ] Yes – Fully-Automatic
- [ ] Yes – Auto-Seals or Blinds
- [x] No – Manual

Luminous NOVA – the Industry's premium performing, high STC framed glass wall, provides 44 STC sound control in manually operated, multi-directional, pivoting, individual panels that store on centerline at room perimeters. Fully framed panels eliminate the need for back-painted glass as the glass is fully contained inside **NOVA's** 4-11/16" **(44 STC)** frame. Pass doors with full ADA-compliant panic hardware can be located in any panel.

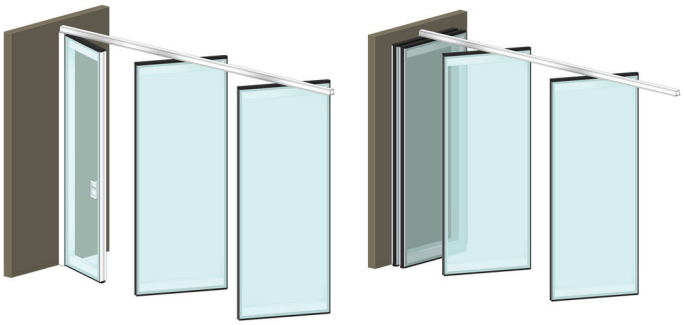

WEIGHTS:
8.0 lbs. / sq. ft.
[39kg / m2]

NOVA

More Information

Dimensions in [ ] are millimeters. Visit Kwik-Wall.com for additional product information and to connect with your authorized Kwik-Wall distributor.

©Copyright 2024, Kwik-Wall Company

NOVA™ – Individual, Pivoting Panels

SECTION 10 22 39 – FOLDING PANEL PARTITIONS – GLASS

PART 1 – GENERAL

1.01 DESCRIPTION

A. General
   1. Furnish and install acoustically rated, movable glass partitions, and suspension system with electrically or manually operated seal systems. Provide all labor, materials, tools, equipment, and services for glass movable walls in accordance with provisions of contract documents.

1.02 RELATED WORK BY OTHERS

A. Preparation of opening will be by General Contractor. Any deviation of site conditions contrary to approved shop drawings must be called to the attention of the architect.
B. All header, blocking, support structures, jambs, and track enclosures, as required in

1.04 Quality Assurance.

C. Pre-punching of support structure in accordance with approved shop drawings.
D. Paint or otherwise finishing all trim and other materials adjoining head and jamb of the partitions.

1.03 SUBMITTALS

A. Complete shop drawings are to be provided prior to fabrication indicating construction and installation details. Shop drawings must be submitted within 60 days after receipt of signed contract. Show performance test results and details of construction materials, colors, profiles, and opening dimensions. Appropriate LEED 2009 (v3) credit for the following:
   IEQ Credit 8.1: Daylight & Views – Daylight 75% of Spaces
   IEQ Credit 8.2: Daylight & Views – Daylight 90% of Spaces

1.04 QUALITY ASSURANCE

A. Preparation of the opening shall conform to the criteria set forth per ASTM E557 Standard Practice for Architectural Application and Installation of Operable Partitions.
B. Glass shall be safety glass per ISO 28278-1:2011 or ASTM C1048-18 equivalent standard
C. Partition shall be tested to the ISO 10140-2 or ASTM E90 equivalent standard
D. Product to meet ANSI/ASA Standard S12.60, Acoustical Performance Criteria, Design Requirement and Guidelines for Schools.

1.05 PRODUCT DELIVERY, STORAGE, AND HANDLING

A. Proper storage of partitions before installation and continued protection during and after installation will be the responsibility of the General Contractor.

1.06 MANUFACTURER WARRANTY

A. Provide folding glass partitions system's standard limited warranty guaranteed against defects in material and workmanship for a period of five (5) years for panels and 10 years for tracks. Warranty does not cover glass damage after delivery, abuse or misuse, and must be installed by a factory trained, approved installer.

PART 2 – PRODUCTS

2.01 ACCEPTABLE MANUFACTURERS

A. Upon compliance with all the criteria specified in this section, Manufacturers wishing to bid products similar to the product specified must submit to the architect 10 days prior to bidding complete data in support of compliance and a list of three past installations of products similar to those listed. The submitting manufacturer guarantees the proposed substituted product complies with the product specified and as detailed on the drawings.

2.02 MATERIALS

A. Product to be top supported, individual, centerline operating acoustically rated glass panels, with Basis-of-Design the NOVA™ series by Kwik-Wall.
B. Panel Construction
   1. Panels shall be nominally 4 9/16 [116] thick and up to 51 1/8" [1300] in width.
   2. Frames shall be of architectural grade aluminum with powder coated or anodized finish with vertical edges that form a male and female style interlocking connection. Standard panel heights up to 10'-0" [3098] with full glass fronts.
   3. Glazing sealants and gaskets suited and shaped for the glass configuration and thickness.
   4. Horizontal Seals
      b. Manually operated
         i. Top and bottom horizontal manually operated, crank activated seals shall provide continuous contact with the track and floor with a total clearance of 3/4" [20] when extended and provide a minimum 40lbs [18kg] of seal forces. Each top and bottom seal has an operating range of 3/4" [20].
      c. Top and bottom PVC vinyl seal shoes to form tight acoustic connections with track and floors.
   5. Vertical Seals: Vertical sound seals shall be of male/female configuration with full length gaskets, ensure panel- to-panel alignment and prevent sound leaks between panels.

©Copyright 2025, Kwik-Wall Company

NOVA™ – Individual, Pivoting Panels

SECTION 10 22 39 – FOLDING PANEL PARTITIONS – GLASS

6. Glass: The glass shall be factory installed low iron, clear tempered on both sides of the panels with a minimum 3 1/2" [89] airspace between the glass. Either laminated or tempered safety glass can be supplied to meet the safety and acoustical performance requirements in Section 1.04.
    a. Glass thickness to be nominally 1/4" [6] and with final overall panel thickness of nominally 4 9/16" [116].
    b. Options:
        i. Glass can be fully back-painted or custom to create opaque writing surfaces
        ii. Glass can be customized with decals and etching (requires factory pre-approval)
7. Weight of Panels: 8.0 lbs./sq. ft. [39 kg/m2]
    C. Suspension system. Track shall be of clear anodized, black or white powder coated architectural grade extruded aluminum alloy 6063-T6. Track design shall provide integral support for adjoining ceiling, soffit, or plenum sound barrier. Track shall be connected to the structural support by pairs of threaded steel hanger rods. Built-in ceiling trim shall match finish, providing enclosure of plenum sound barrier on both sides of the track for maximum sound control. A section of track will be removable in order to make it possible for a panel to be removed from the track for later maintenance.
2. Each panel shall be supported by one 4-wheeled carriers.
3. Plenum closure (by others): Design of plenum closure must permit lifting out of header panels to adjust track height. Plenum closure required for optimum sound control of partition per ASTM E-557.

D. Finishes
1. Panel frames shall be clear anodized, black or white (added cost) powder coated aluminum
    a. Optional (upcharge):
        i. Customer selected custom RAL color (requires factory pre-approval and may extend lead time)
2. Fixed, continuous gasketing and sound seals gaskets shall be black.
3. Optional solid faced panels to be of same frame construction and match the profiles of adjacent panels. These solid faced panels in lieu of glass shall be of (select one):
    a. Manufacturer's standard selection of melamine laminated to medium density fiberboard (MDF).
    b. High pressure laminate (HPL) from manufacturer's standard selection laminated to MDF.
    c. Manufacturer's standard writable and magnetic high-pressure laminate with MDF.

E. Available Accessories/Options
1. Inset pass door, single "U" shaped pass door, ADA compliant, allows the pass door to be located in any location in the opening. Pass door includes a turn handle on both sides and solid back-painted glass above door.
    a. Panic hardware with lock override available.
2. Inset pass door, double "L" shaped pass door, ADA compliant, allows the pass doors to be located in any location in the opening. Pass doors include a turn handle on both sides and solid back-painted glass above doors.
    a. Panic hardware with lock override available on one of the doors.
3. Full height pass door attached to carrier panel
4. Full height pass door attached to wall jamb
5. Locks
6. Fully or partially back-painted glass
7. Internal muntins

2.03 OPERATION

A. Panels shall be manually moved from the storage area, positioned in the opening, and the seals set.
1. Manually operated
    a. Seals manually set and retract by means of crank operation at edge of panel.

B. Final partition closure to be by (select one):
1. Expandable panel with integral telescopic jamb which compensates for minor wall irregularities and provides seal force against the adjacent wall for optimum sound control.
    a. Manually operated. Solid face only.
        i. The jamb will manually extend by means of crank operation on face of panel. The jamb shall extend a maximum of 4" [102].
2. Hinged closure panel. Full height hinged panel at one end of the opening that is hinged to a fixed two-piece adjustable aluminum jamb and is permanently attached in the opening.
3. Manually operated
    a. Move panels into place
    b. Manually set seals via crank operation from edge of panel
    c. Set closure mechanism (crank operation or hinge panel closure)
    d. Retract seals and manually move to storage area

©Copyright 2025, Kwik-Wall Company

NOVA™ – Individual, Pivoting Panels

SECTION 10 22 39 – FOLDING PANEL PARTITIONS – GLASS

2.04 ACOUSTICAL PERFORMANCE

A. Supply a copy of the acoustical test report certifying that the partition was tested by an independent laboratory. The partition tested must be fully functional and meet ISO or ASTM standards. The test results must be similar to or exceed the performance specified. Any sound test not showing panel construction details and weight or not disclosing all of the information will not be valid. Manufacturers must also guarantee that the products proposed have the same characteristics as the products specified and are in accordance with the drawings.

B. Standard panel construction shall have obtained either an ISO dB or ASTM STC rating of (43 dB/44 STC.

PART 3 – EXECUTION

3.01 EXECUTION

A. Installation. The complete installation of the operable wall system shall be by an authorized factory-trained installer and be in strict accordance with the approved shop drawings and manufacturer's standard printed specifications, instructions, and recommendations.

B. Cleaning
   1. All track and panel surfaces shall be wiped clean and free of handprints, grease, and soil.
   2. Cartoning and other installation debris shall be removed to onsite waste collection area, provided by others.

C. Training
   1. Installer shall demonstrate proper operation and maintenance procedures to owner's representative.
   2, Operating handle and owner's manuals shall be provided to owner's representative.

©Copyright 2025, Kwik-Wall Company

NOVA™ – Individual, Pivoting Panels

SECTION 10 22 39 – FOLDING PANEL PARTITIONS – GLASS

STACKING CONFIGURATIONS

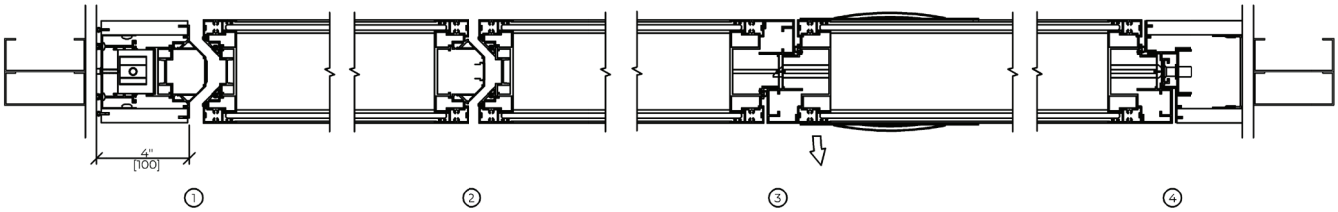

HORIZONTAL DETAILS

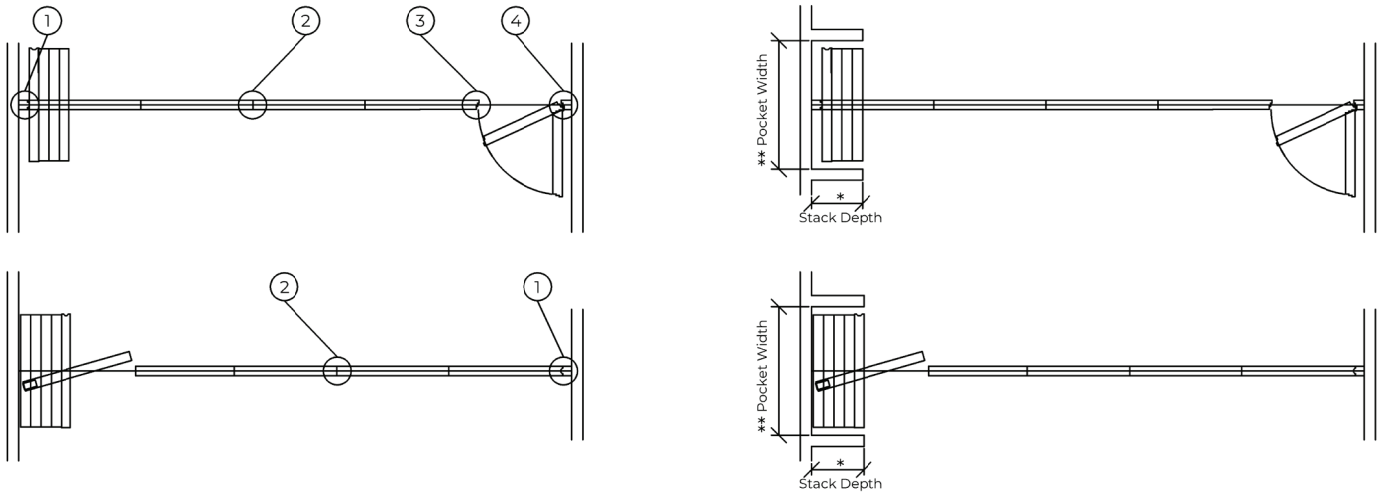

Stack Depth Allowance: 5-1/8" [130] / panel*
*Add: 1-1/2" [38] glass jamb; 3.9" [100] for HPL jamb; 3-3/4" [95] for hinged jamb.

Pocket Width:
Widest panel + 3-1/2"ea. side of panel stack.

Dimensions in [ ] are millimeters. Visit Kwik-Wall.com for additional product information and to connect with your authorized Kwik-Wall distributor.

©Copyright 2025, Kwik-Wall Company

NOVA™ – Individual, Pivoting Panels

SECTION 10 22 39 – FOLDING PANEL PARTITIONS – GLASS

VERTICAL SECTIONS

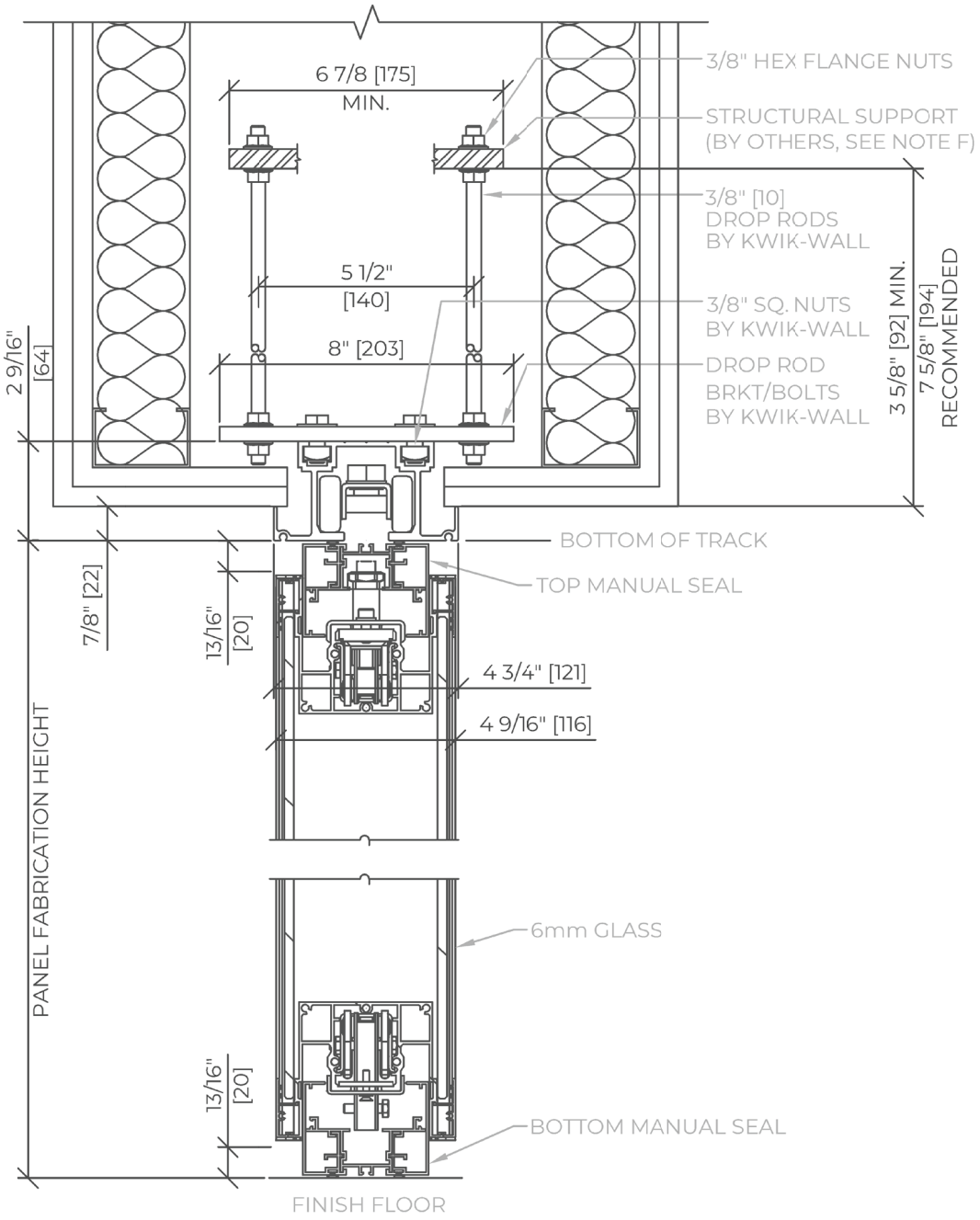

©Copyright 2025, Kwik-Wall Company

NOVA™ – Individual, Pivoting Panels

SECTION 10 22 39 – FOLDING PANEL PARTITIONS – GLASS

ELEVATION DETAILS

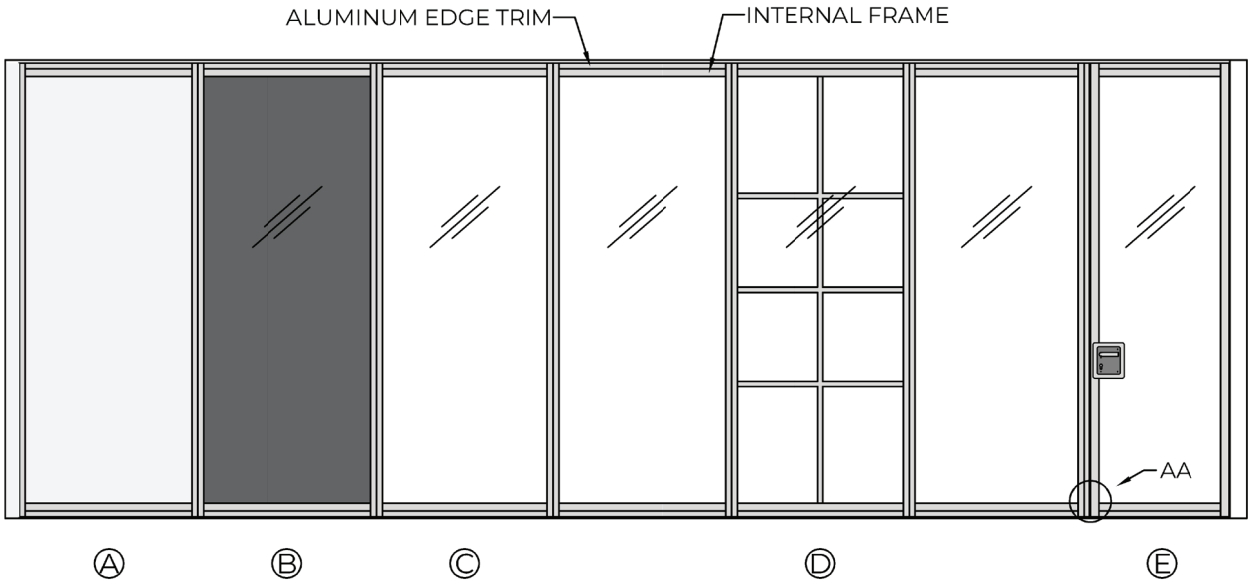

DETAIL AA

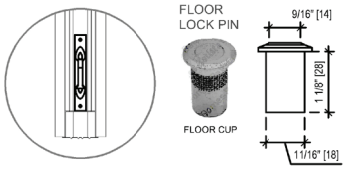

FLOOR LOCK
FOR PANEL ADJACENT TO
FULL-HEIGHT DOOR

Ⓐ TELESCOPIC PANEL - SOLID FACE ONLY

Ⓑ FULLY BACK-PAINTED GLASS

Ⓒ BASIC PANEL

Ⓓ HORIZONTAL AND VERTICAL INTERNAL MUNTINS

Ⓔ FULL-HEIGHT DOOR
MAXIMUM PANEL HEIGHT OF 10'-9 15/16" [3300] WHEN HINGED TO WALL JAMB
MAXIMUM PANEL HEIGHT OF 10'-0" [3048] WHEN HINGED TO CARRIER PANEL
INSET PASS DOOR, AVAILABLE FOR PANEL HEIGHTS OVER 7'-7 3/4" [2330]
OPTIONAL PANIC HARDWARE

Dimensions in [ ] are millimeters. Visit Kwik-Wall.com for additional product information and to connect with your authorized Kwik-Wall distributor.

©Copyright 2025, Kwik-Wall Company